REVISIONS				
ZONE	REV	DESCRIPTION	DATE	APPROVED
	A	REDRAWN	14AUG97	

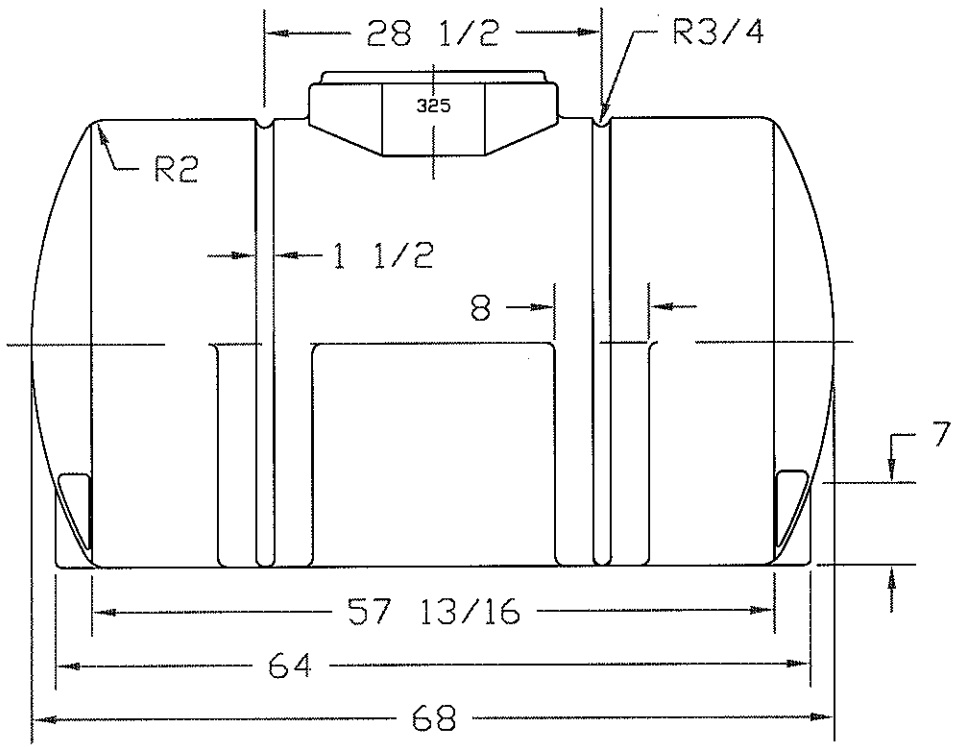

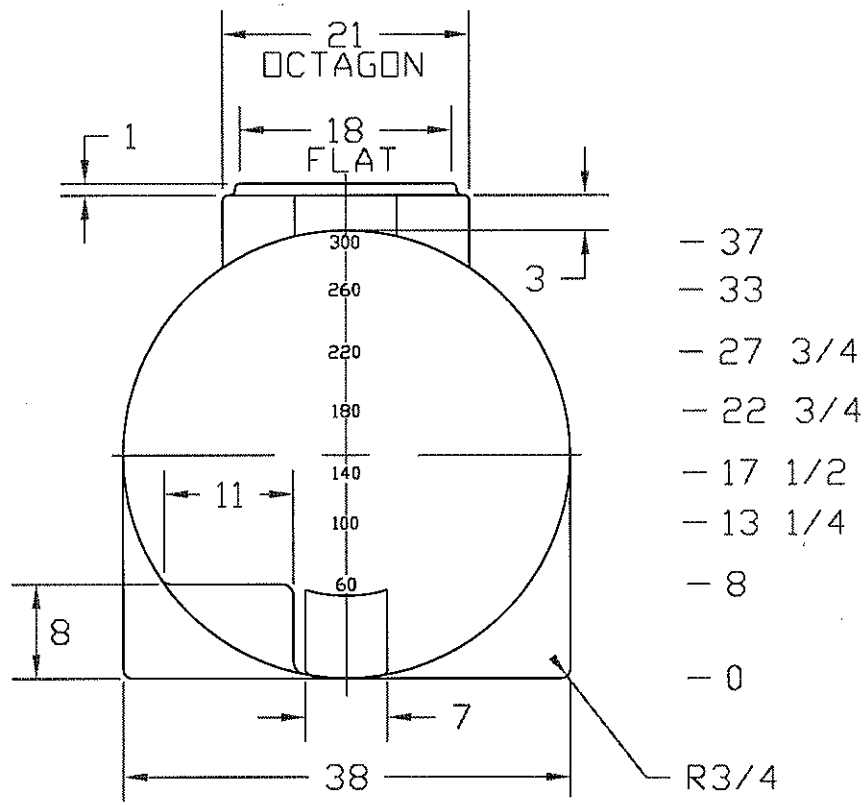

GALLON MARKS BOTH ENDS

NORWESCO
ST. BONIFACIUS, MN

325 GALLON HORIZONTAL LEG TANK

JTP 14AUG97	SIZE A	FSCM NO.	DWG NO.	REV A
	SCALE 1/16		SHEET	